THIS DRAWING IS UNPUBLISHED. RELEASED FOR PUBLICATION -,- .
© COPYRIGHT - BY TYCO ELECTRONICS CORPORATION. ALL RIGHTS RESERVED.

LOC	DIST
H	—

REVISIONS

P	LTR	DESCRIPTION	DATE	DWN	APVD
	G	REVISE PER ECO-10-018803	14SEP2010	LC	CW
	H	ECO-12-003005	22FEB12	SY	MQW
	J	ECR-12-009867	25NOV12	SY	AC

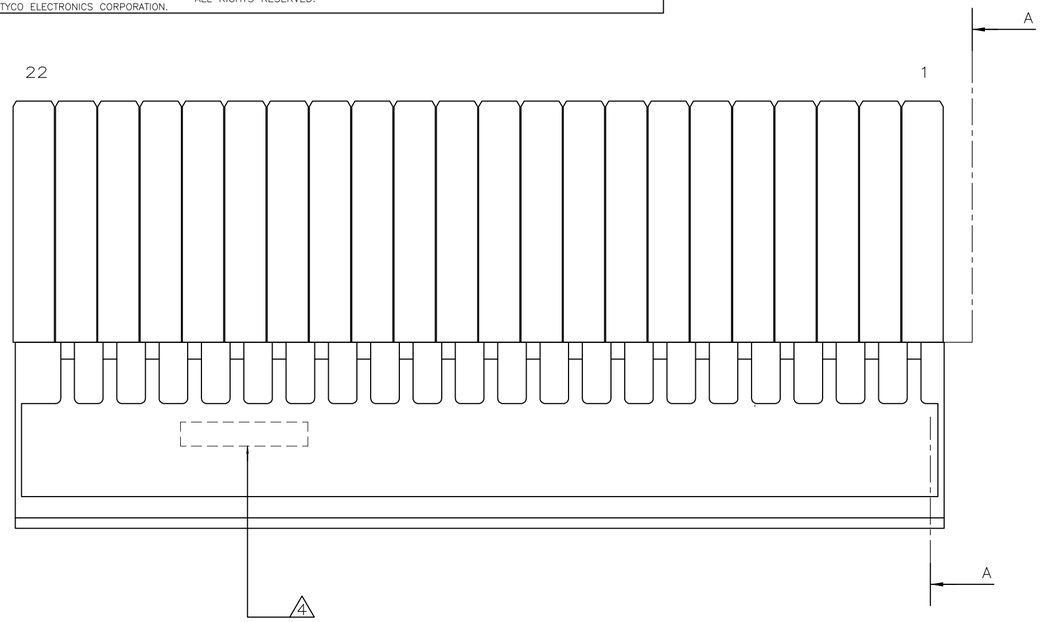

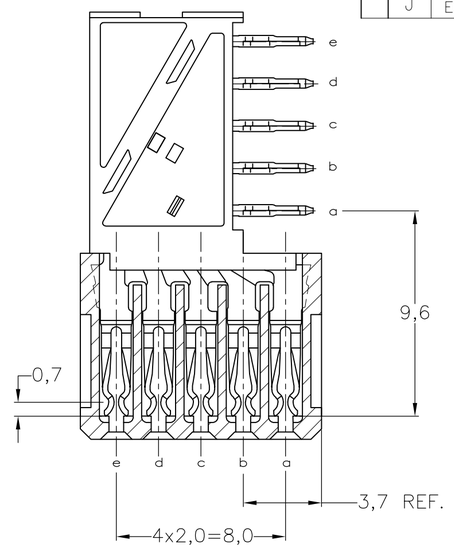

SECTION A–A

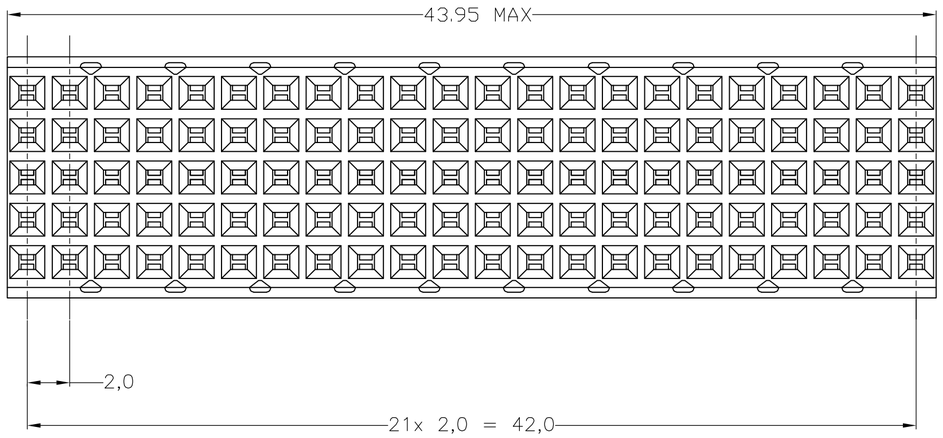

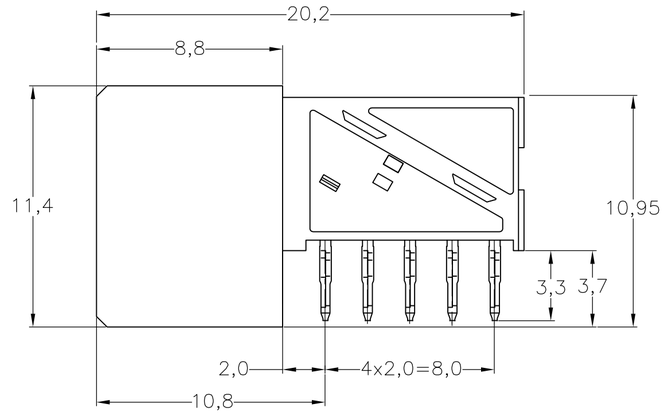

NOTES:

1. MATERIAL CONTACT; PHOSPHORBRONZE
   MATERIAL HOUSING; GLASSFILLED POLYESTER (GRAY)
   UL–RATING 94V0.
2. GENERAL PLATING SPECIFICATION: UNDERPLATING (ENTIRE CONTACT): 1,27µm NICKEL MIN. AND ACTION PIN: 0,5µm TIN–LEAD MIN. FOR PLATING OF MATING SURFACES SEE APPLICABLE SPECIFICATION REFERENCE FOR EACH DASH NUMBER.
3. CONFORMS TO ALL TESTING ACCORDING IEC 61076–4–101 PERFORMANCE LEVEL 2.
4. CONNECTOR PRINTED WITH PARTNUMBER AND DATECODE
5. PLATED–THROUGH HOLES AT 2x2mm SQUARE GRID. 110 HOLES
6. FITS WITH INTEGRATED GROUND RETURN UPPERSHIELD BASIC P.N. 352151
7. CONNECTOR TESTED AND QUALIFIED AGAINST TELCORDIA GR–1217–CORE QUALITY LEVEL III, CENTRAL OFFICE APPLICATIONS.
8. 0.76um MIN GOLD PLATING AT MATING SURFACES.

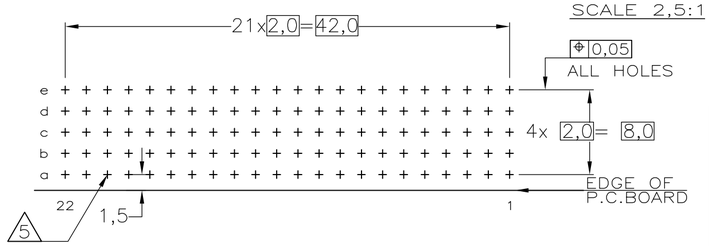

COMPONENT SIDE AS SHOWN
RECOMMENDED PCB–HOLE LAY–OUT

P.C.B. HOLE DIM. ACTION PIN
FOR DETAILS SEE
APPLICATION SPECIFICATION

	FINISH	MATERIAL	PARTNUMBER
	2 3 8	1	3–188836–0
OBSOLETE	2 7	1	~~188836–9~~
OBSOLETE	2 3	1	~~188836–1~~

THIS DRAWING IS A CONTROLLED DOCUMENT.

DIMENSIONS: MM

TOLERANCES UNLESS OTHERWISE SPECIFIED:

0 PLC	± 0.2
1 PLC	± 0.2
2 PLC	± 0.2
3 PLC	± 0.2
4 PLC	± –
ANGLES	± –

MATERIAL –

FINISH –

DWN E.MÖHLMANN 11FEB97
CHK W.V.D.HEIJDEN –
APVD F.V.KONINGSBRUGGE –
PRODUCT SPEC 108–19082
APPLICATION SPEC 114–19029
WEIGHT –

Tyco Electronics
Tyco Electronics Corporation
s–HertogenBosch,Netherlands,

NAME
Z–PACK 2MM HM
110 POS. FEMALE DAUGHTER CARD CONN.
(22 COLUMNS)

SIZE	CAGE CODE	DRAWING NO	RESTRICTED TO
A2	00779	C–188836	–

CUSTOMER DRAWING | SCALE NTS | SHEET 1 OF 1 | REV J

188836

AMP 1471–9 REV 31MAR2000